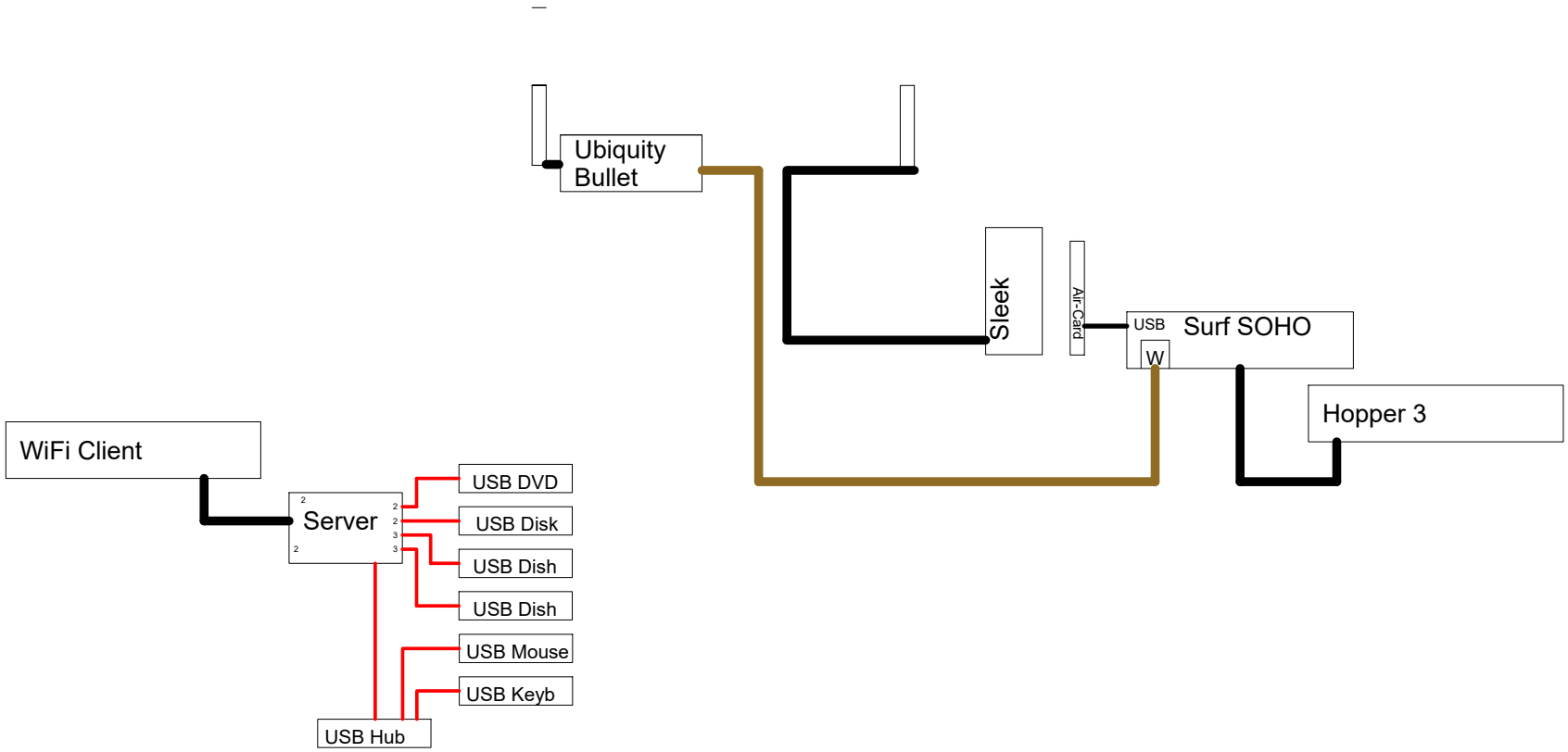Created in TurboCAD LTE,
(www.IMSIDesign.com)